Instructions

RMT-24, RMT-24T, RMT-24R

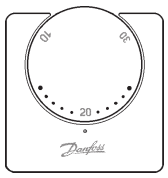

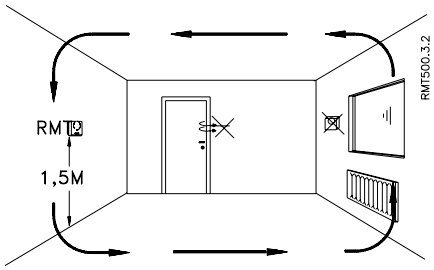

Fig. 1.

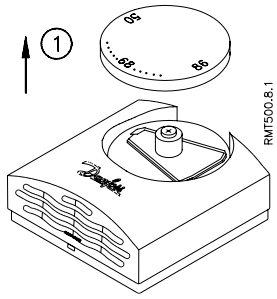

Fig. 2.

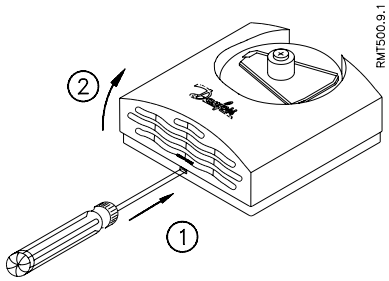

Fig. 3.

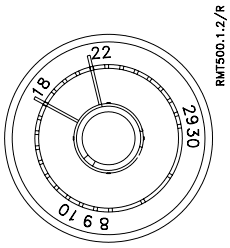

Fig. 4.

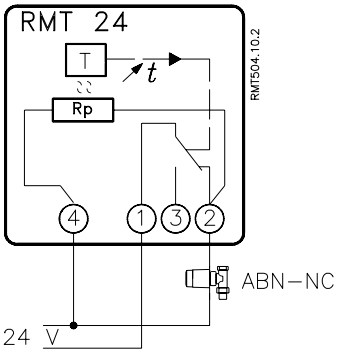

Fig. 5.

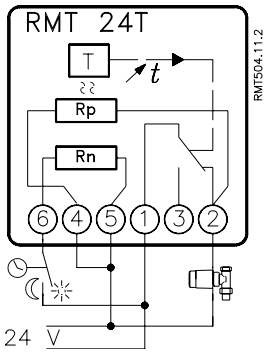

Fig. 6.

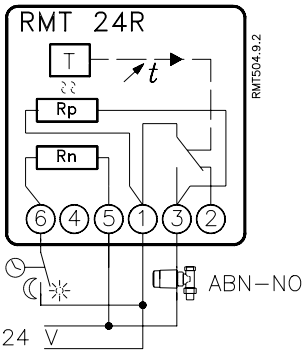

Fig. 7.

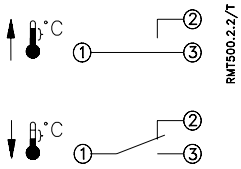

Fig. 8.

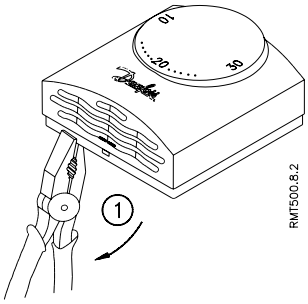

Fig. 9.

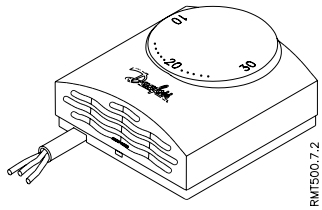

Fig. 10.

Location, fig. 1.
Do not site the room thermostat in a draught, in direct sunlight or close to appliances giving off heat (e.g. television set).

Fixing, fig. 2. and 3.
Make sure the supply voltage to the system is disconnected before commencing installation or subsequentially removing the thermostat cover.
Fix the base moulding on a flat wall or on a flush box.

The temperature range can be limited by moving the two springs on the back of the setting knob, fig. 4.

Wiring, fig. 5, 6 & 7.
Switch function: SPDT, fig. 8, 24V, 50-60Hz, 10 (4) A.

Min. contact load: 70 mA

When the cable is to be wired through the side of the thermostat, break out the knockout with a pair of pliers (fig. 9 & 10).

When the room thermostat is connected to an inductive load, without noise suppression, there might be a risk of radio and TV interference.

RMT versions with parallel accelerator Rp, will have a lower temperature differential when terminal ❶ is connected as shown in fig. 5 & 6.

RMT-24T and RMT-24R only
RMT-24T and RMT-24R will set-back the temperature by 5K, when the built-in resistance Rn is connected as shown in fig. 6 & 7.

NB. RMT-24R is only to be applied together with an ABN actuator of the NO-type (Normally Open).